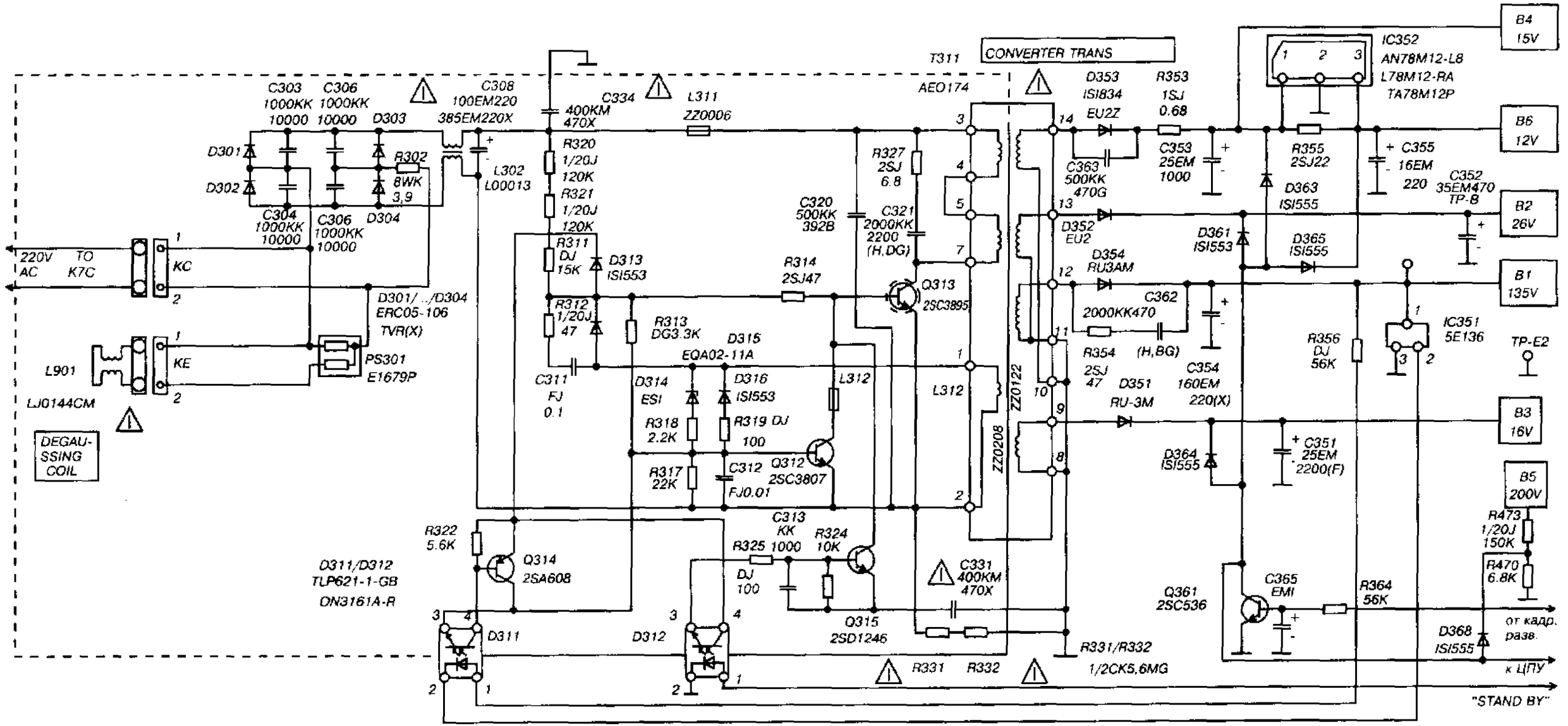


"SANYO CEM 2511 VSU-00"

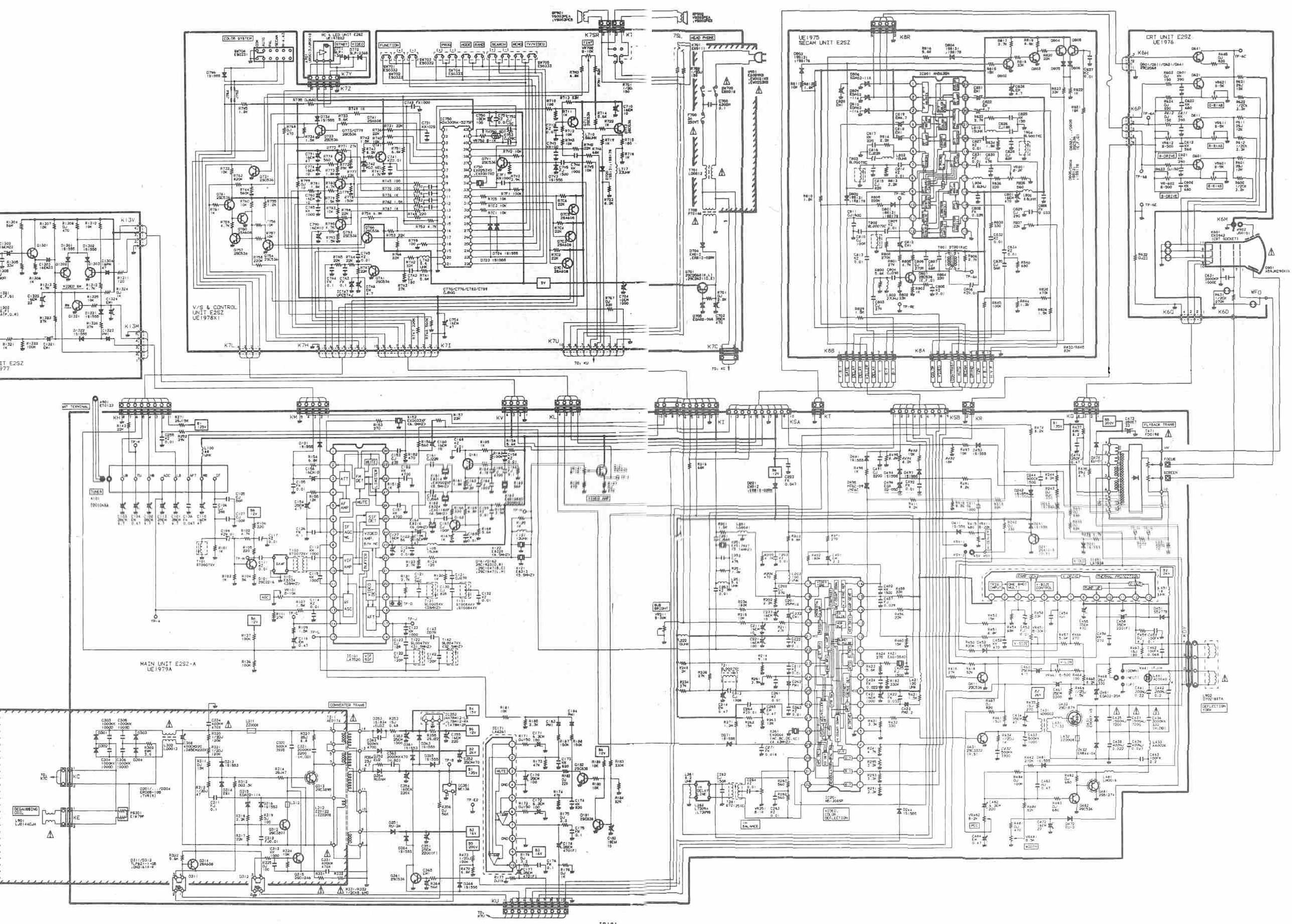

V/S & CONTROL
UNIT E2SZ
UE1978X1
UE1975
SECAM UNIT E2SZ
CRT UNIT E2SZ
UE1976
MAIN UNIT E2SZ-A
UE1979A
CONVERTER TRANS
DEGAUSSING COIL
FLYBACK TRANS

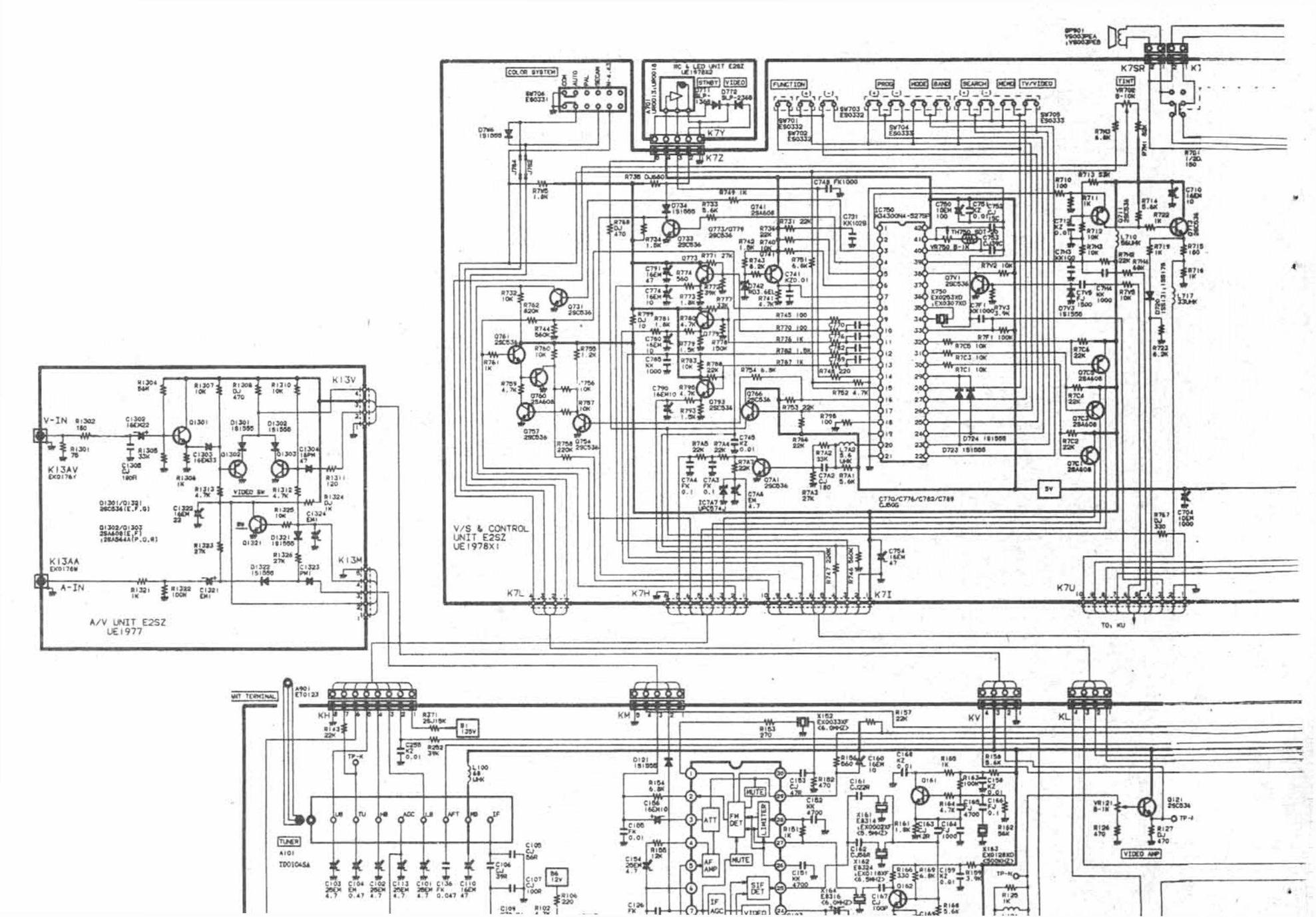

COLOR SYSTEM
RC & LED UNIT E2SZ
UE1978X2
FUNCTION
PROG
MODE
BAND
SEARCH
MEMO
TV/VIDEO
K7SR
K7Y
K7Z
K7L
K7H
K7I
K7U
K13V
K13AV
K13AA
K13M
V-IN
A-IN
VIDEO SW
A/V UNIT E2SZ
UE1977
V/S & CONTROL
UNIT E2SZ
UE1978X1
TO: KU
ANT TERMINAL
KH
KM
KV
KL
TUNER
A101
TD01045A
ATT
FM DET
MUTE
LIMITER
AF AMP
SIF DET
IF AGC
VIDEO
VIDEO AMP

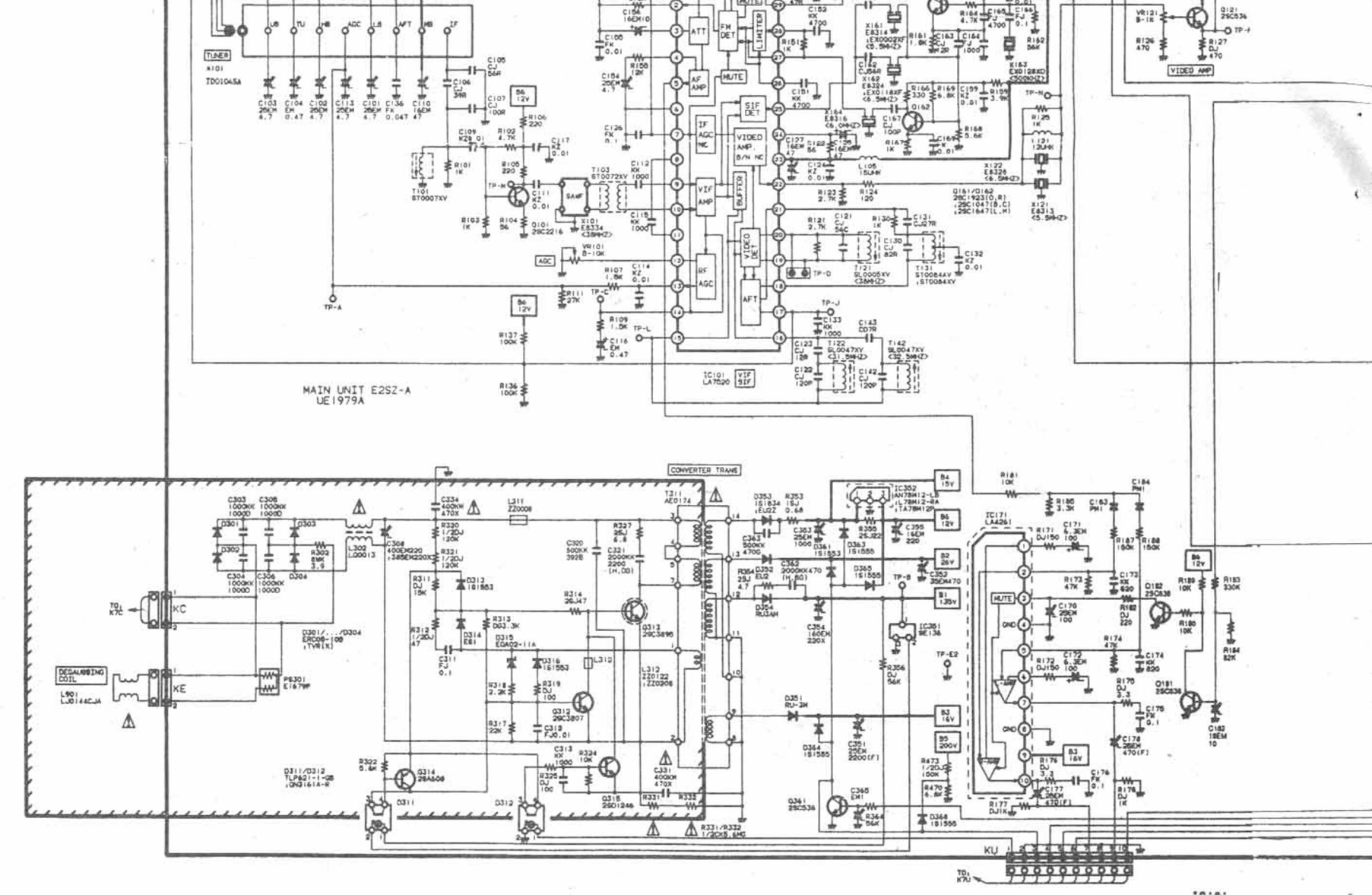

TUNER
A101
TD0104SA
MAIN UNIT E2SZ-A
UE1979A
CONVERTER TRANS
DEGAUSSING COIL
L901
LJ0144CJA
VIDEO AMP
KC
KE
KU

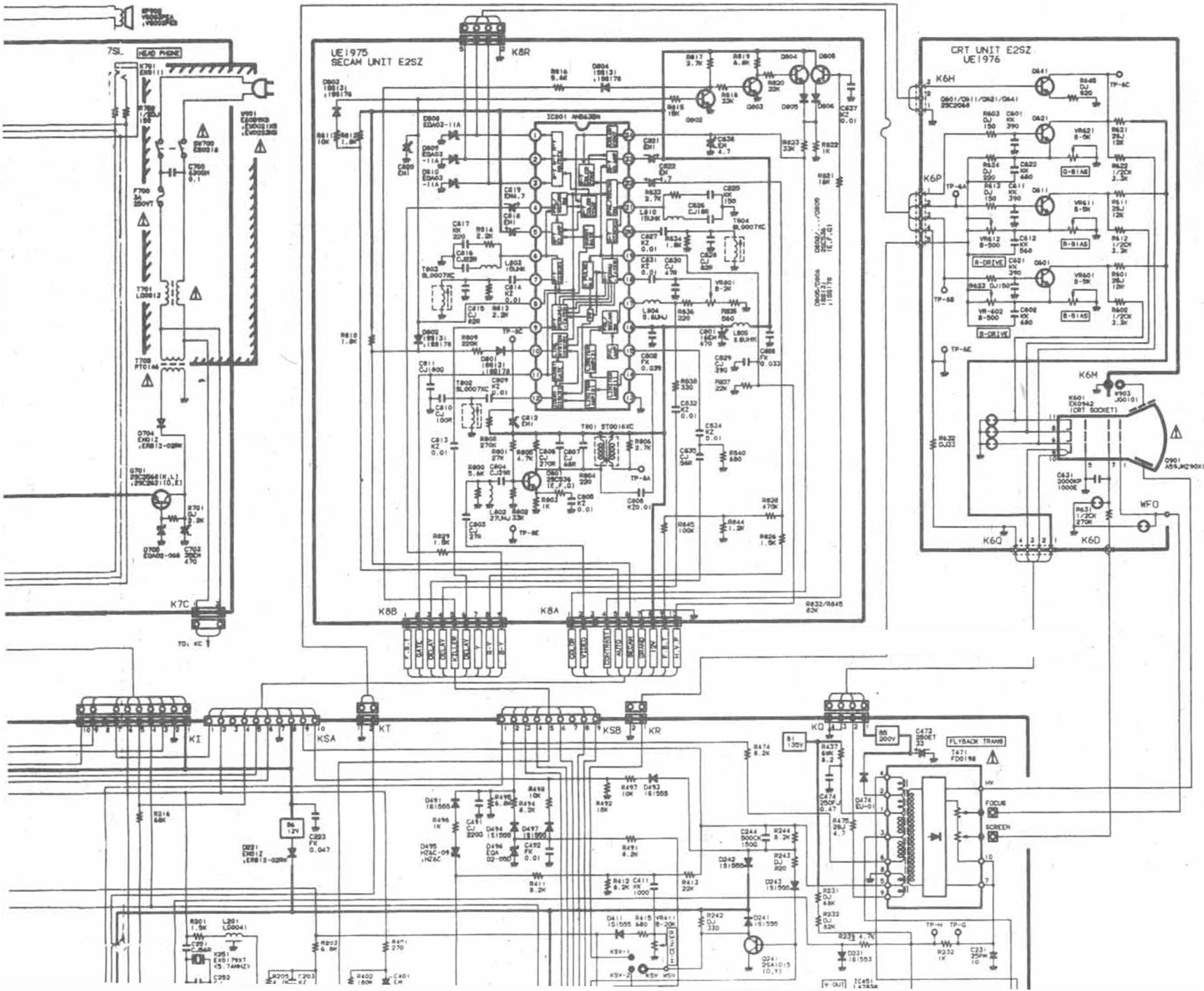
UE1975
SECAM UNIT E2SZ
CRT UNIT E2SZ
UE1976
HEAD PHONE
K8R
K6H
K6P
K6M
K6Q
K6D
K7C
K8B
K8A
K1
KSA
KT
KSB
KR
KQ
FLYBACK TRANS
FOCUS
SCREEN
WFO
R-DRIVE
G-BIAS
B-BIAS

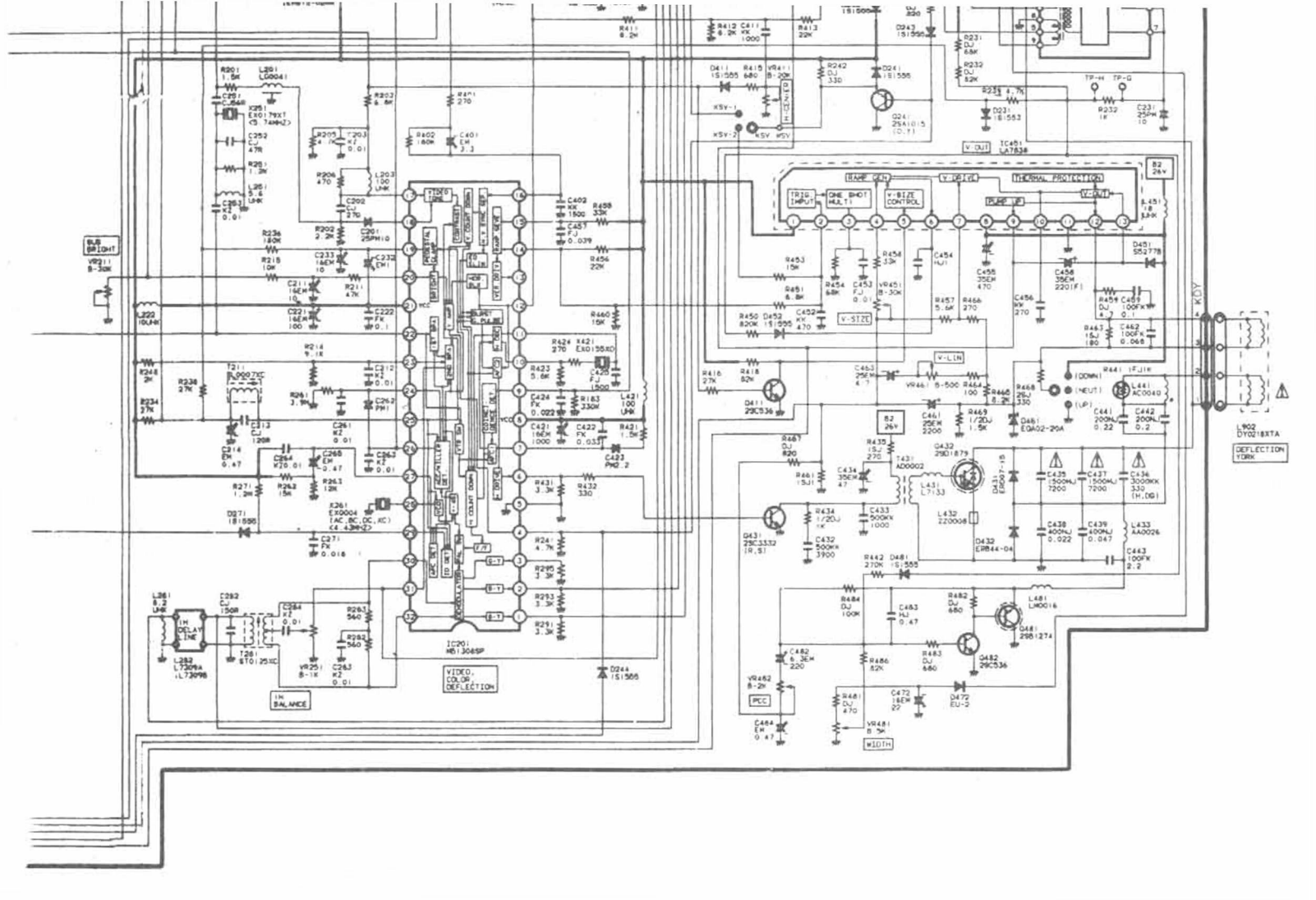

IC201
M51306SP
VIDEO, COLOR, DEFLECTION
IC451
LA7838
RAMP GEN
V-DRIVE
THERMAL PROTECTION
TRIG. INPUT
ONE SHOT MULTI
V-SIZE CONTROL
PUMP UP
V-OUT
V-SIZE
V-LIN
PCC
WIDTH
BUS BRIGHT
1H DELAY LINE
1H BALANCE
L902
DY0218XTA
DEFLECTION YORK
KDY