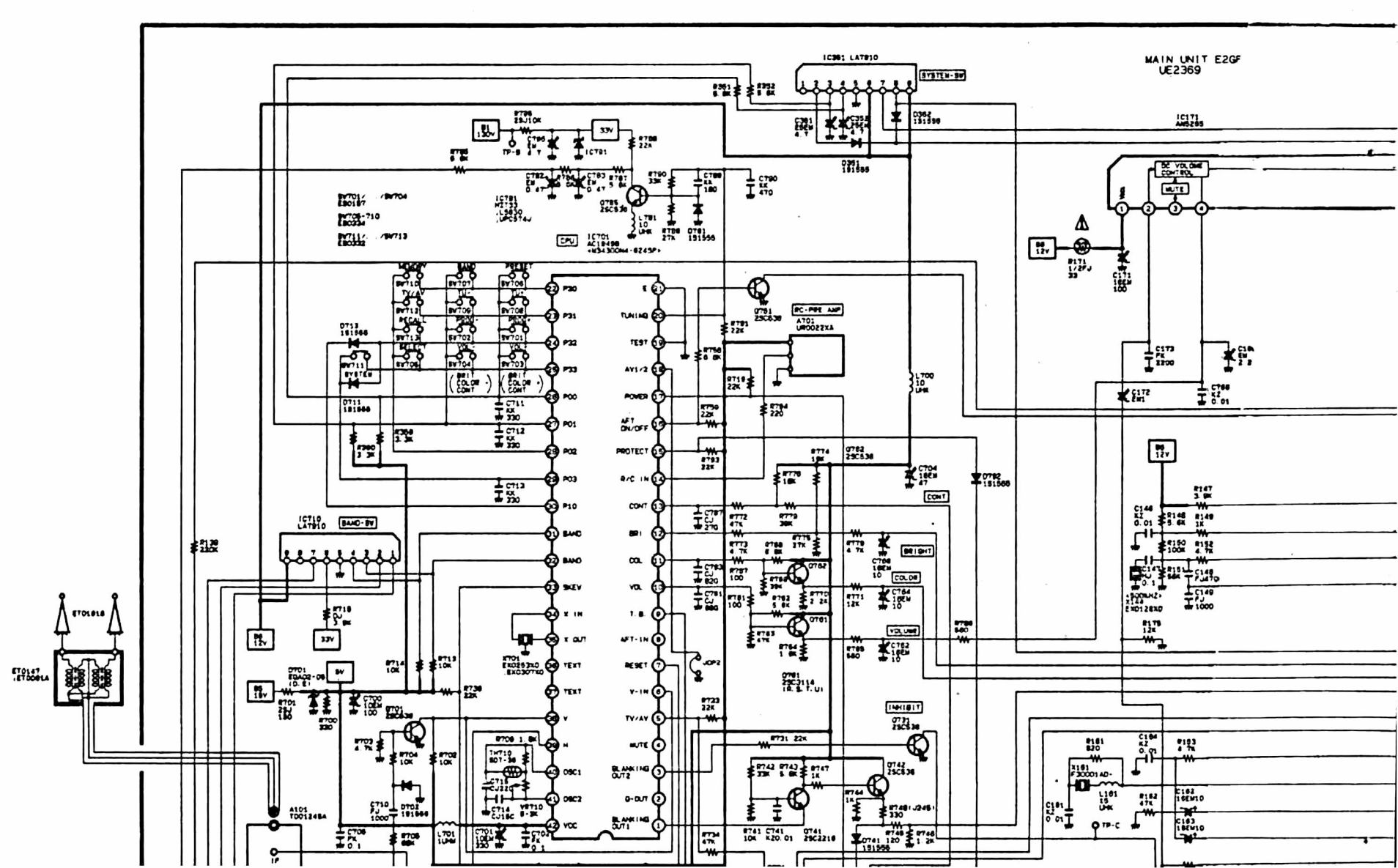
MAIN UNIT E2GF
UE2369
IC361 LA7910
SYSTEM-SW
IC171
AN5265
DC VOLUME CONTROL
MUTE
IC701
AC19498
CPU
RC-PRE AMP
A701
UR0022XA
IC710
LA7910
BAND-SW
CONT
BRIGHT
COLOR
VOLUME
INHIBIT
ET0181
ET0147
ET0081A
A101
TD0124SA
X101
F30001AD-
TP-C
TP-B
JOP2
P30
P31
P32
P33
P00
P01
P02
P03
P10
BAND
SKEW
X IN
X OUT
TEXT
V
H
OSC1
OSC2
VCC
E
TUNING
TEST
AV1/2
POWER
AFT ON/OFF
PROTECT
R/C IN
CONT
BRI
COL
VOL
T.B.
AFT-IN
RESET
V-IN
TV/AV
MUTE
BLANKING OUT2
Q-OUT
BLANKING OUT1

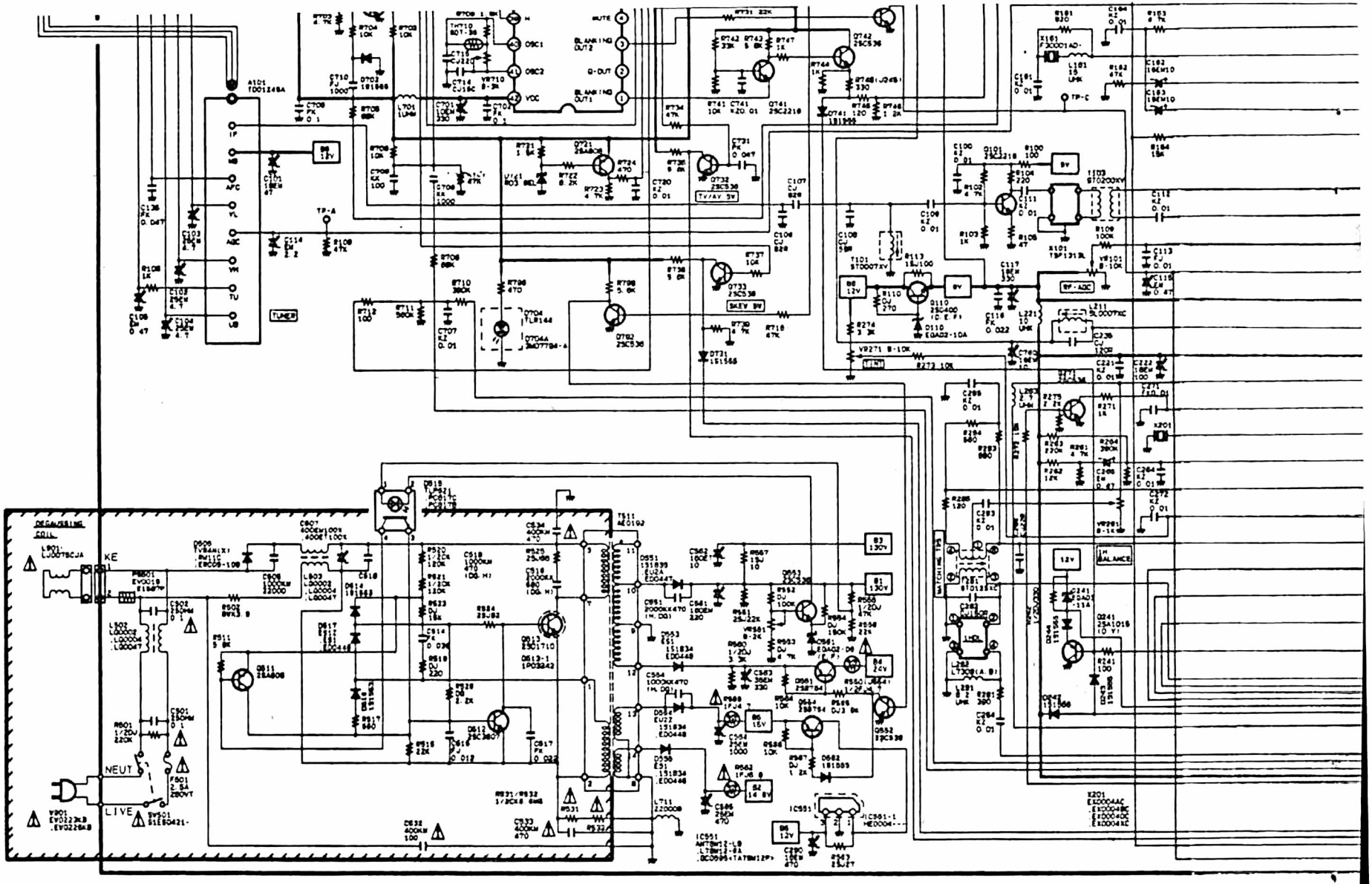

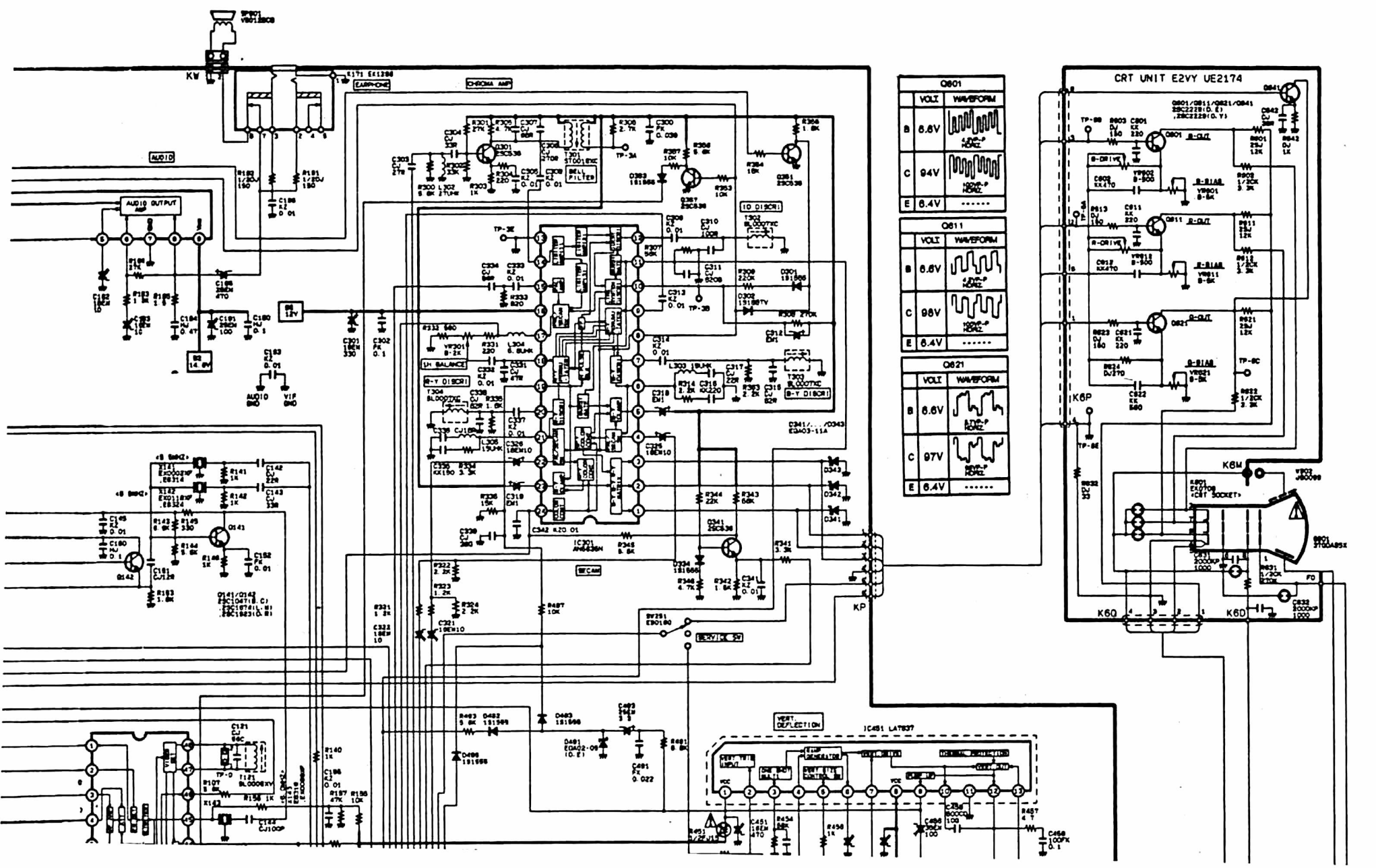

CRT UNIT E2VY UE2174
Q601
VOLT
WAVEFORM
B 6.6V
C 94V
E 6.4V
Q611
B 6.6V
C 98V
E 6.4V
Q621
B 6.6V
C 97V
E 6.4V
KW
KP
K6P
K6M
K6Q
K6D
AUDIO
AUDIO OUTPUT AMP
EARPHONE
CHROMA AMP
BELL FILTER
IO DISCRI
LH BALANCE
R-Y DISCRI
B-Y DISCRI
SECAM
SERVICE SW
VERT. DEFLECTION
IC451 LA7837

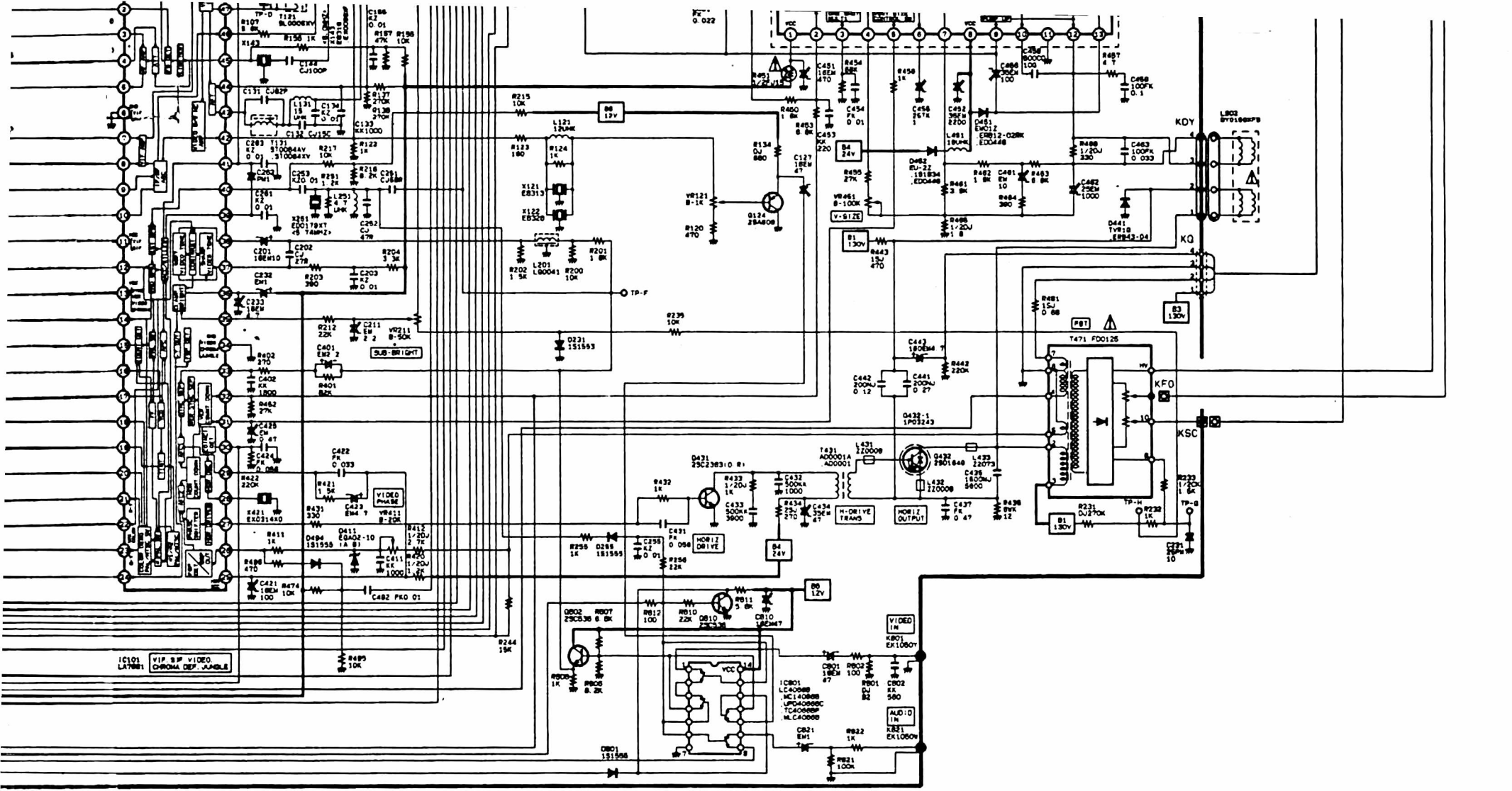
IC101
LA7681
VIF SIF VIDEO
CHROMA DEF. JUNGLE
SUB-BRIGHT
VIDEO PHASE
H-DRIVE TRANS
HORIZ OUTPUT
HORIZ DRIVE
V-SIZE
FBT
T471 FD0125
KDY
KQ
KFO
KSC
TP-F
TP-H
TP-G
VIDEO IN
AUDIO IN
B6 12V
B4 24V
B1 130V
B3 130V
B5 12V