YOSAN YT-

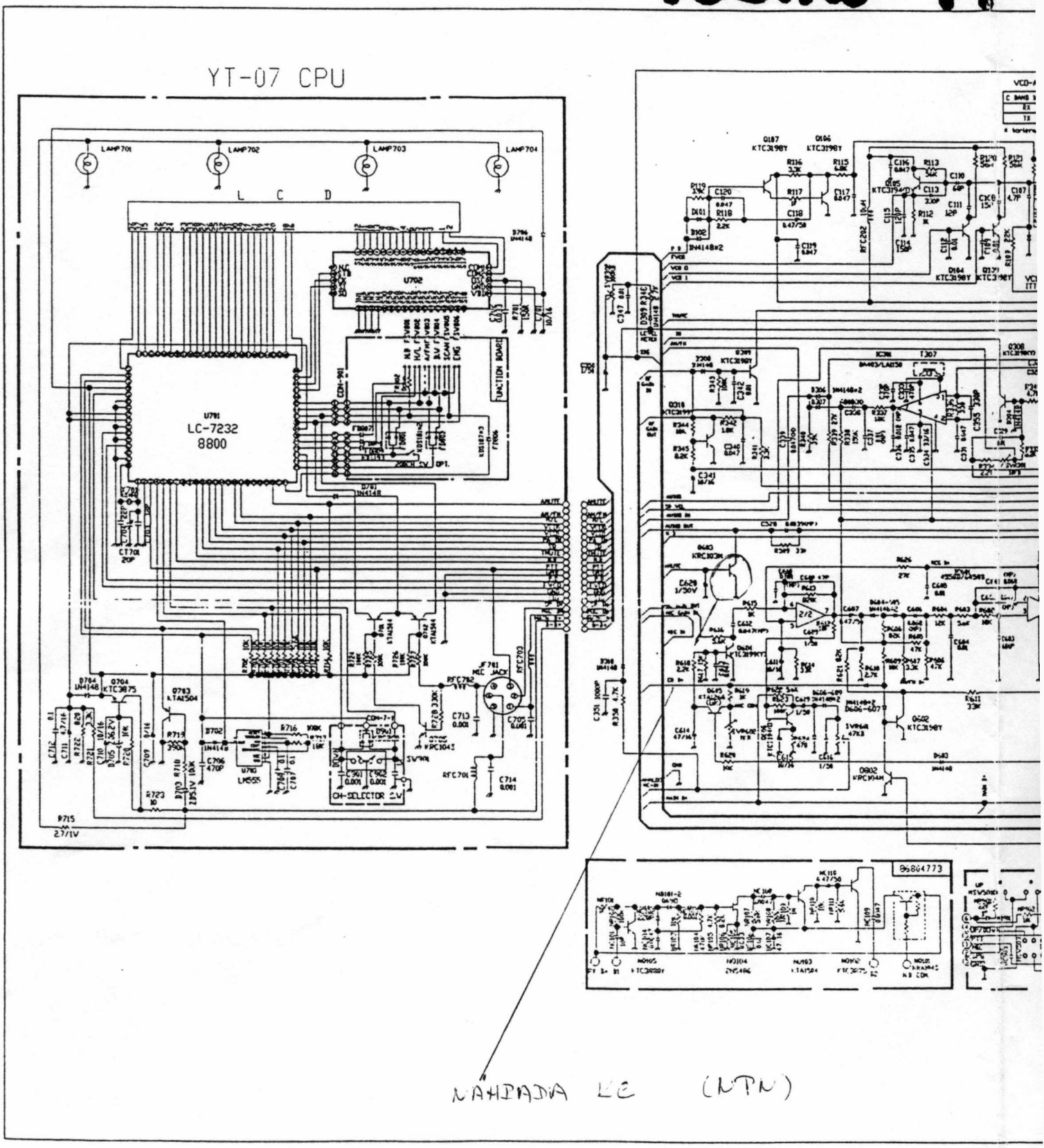
YT-07 CPU
LAMP701
LAMP702
LAMP703
LAMP704
L C D
U702
U701
LC-7232
8800
FUNCTION BOARD
CH-SELECTOR
86804773
NAHIADA KE (NTN)

YT-07

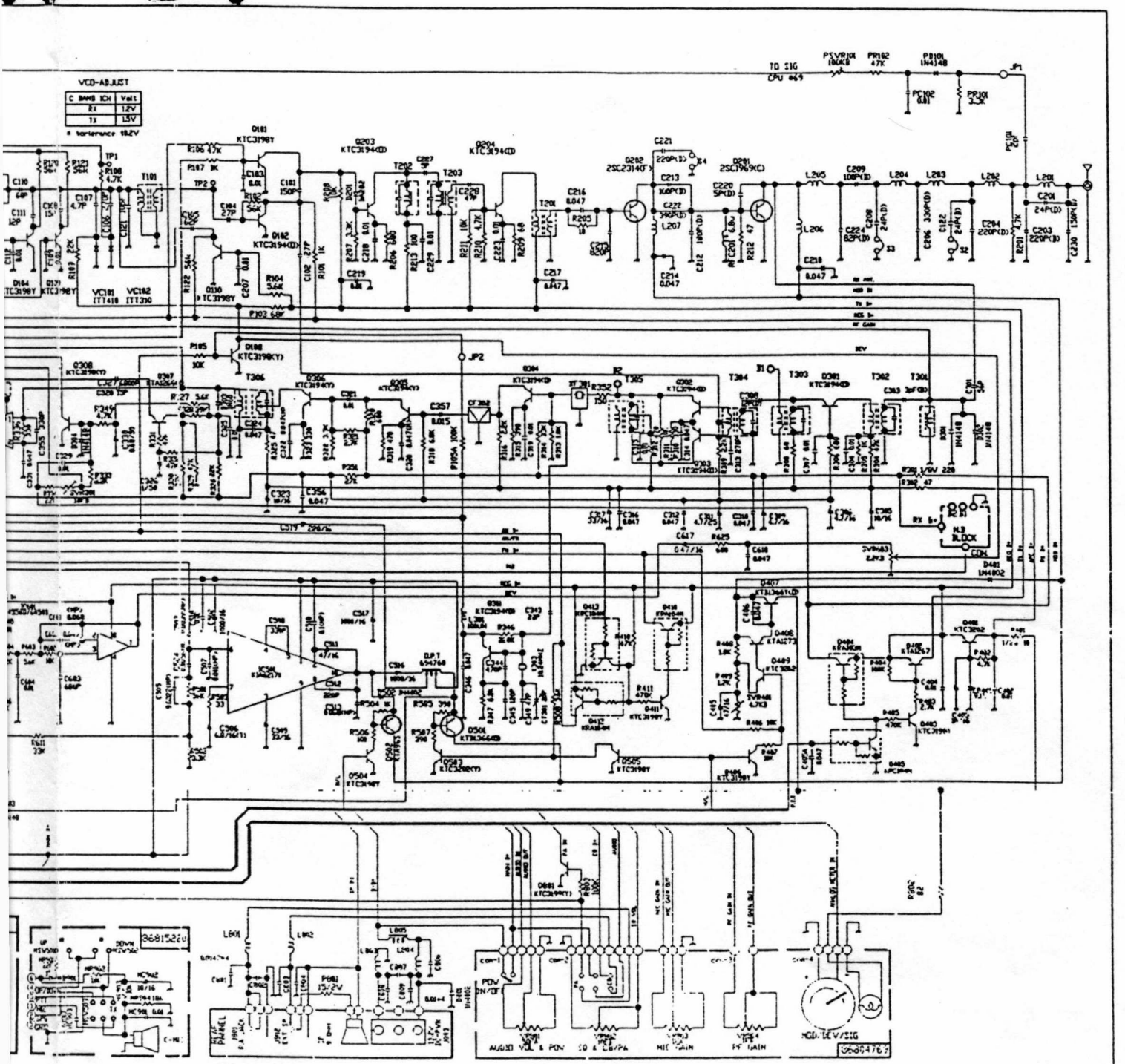
VCO-ADJUST
C BAND ICH | Volt
RX | 12V
TX | 15V
* tolerance 182V
TO SIG
CPU #69
PSVR101 100KB
PR102 47K
PD101 1N4148
JP1
JP2
N.B BLOCK
COM
AUDIO VOL & POW
SQ & CB/PA
MIC GAIN
RF GAIN
MOD/DEV/SIG
POW ON/OFF
MEAS PANNEL
C-MIC