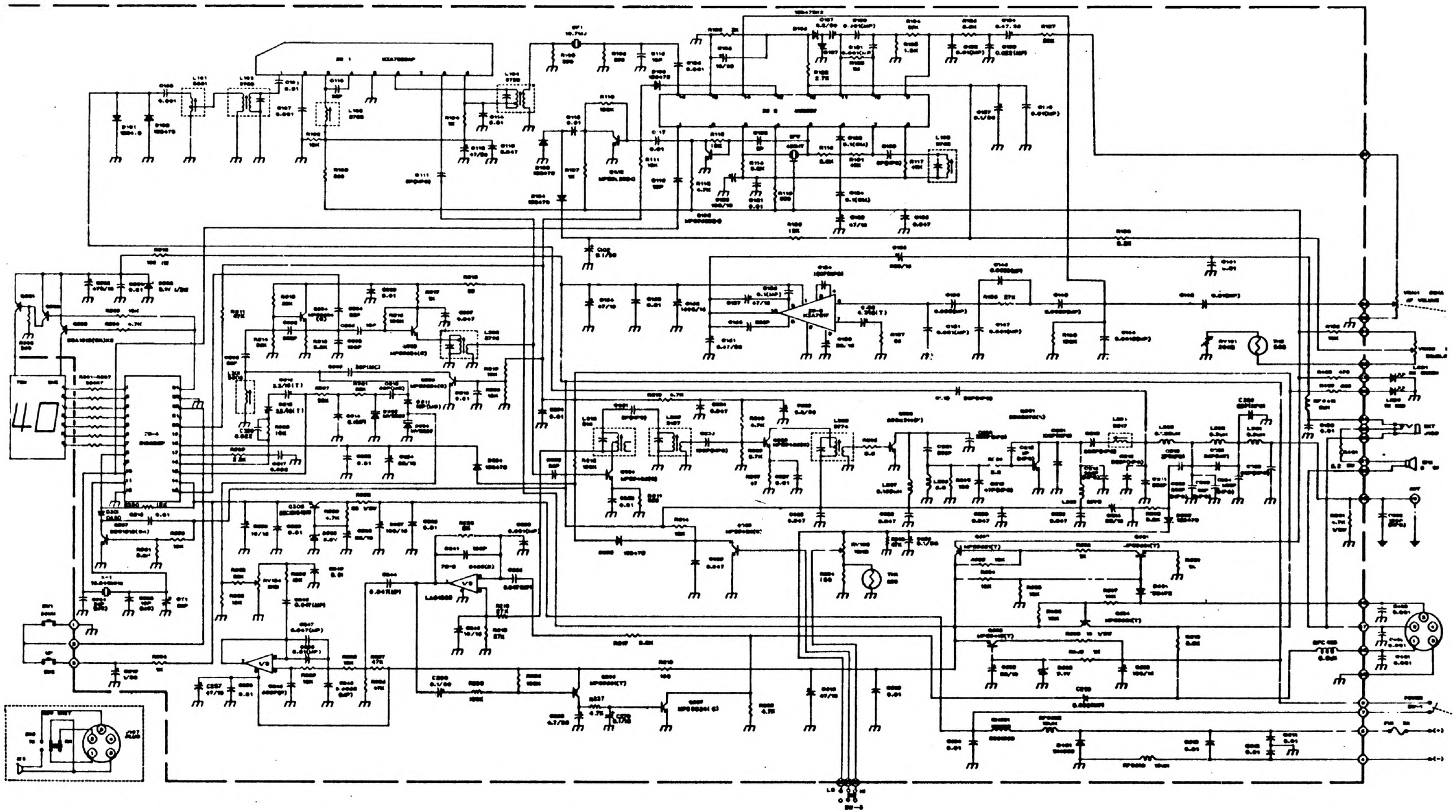

Parts Layout. Main PC Board.

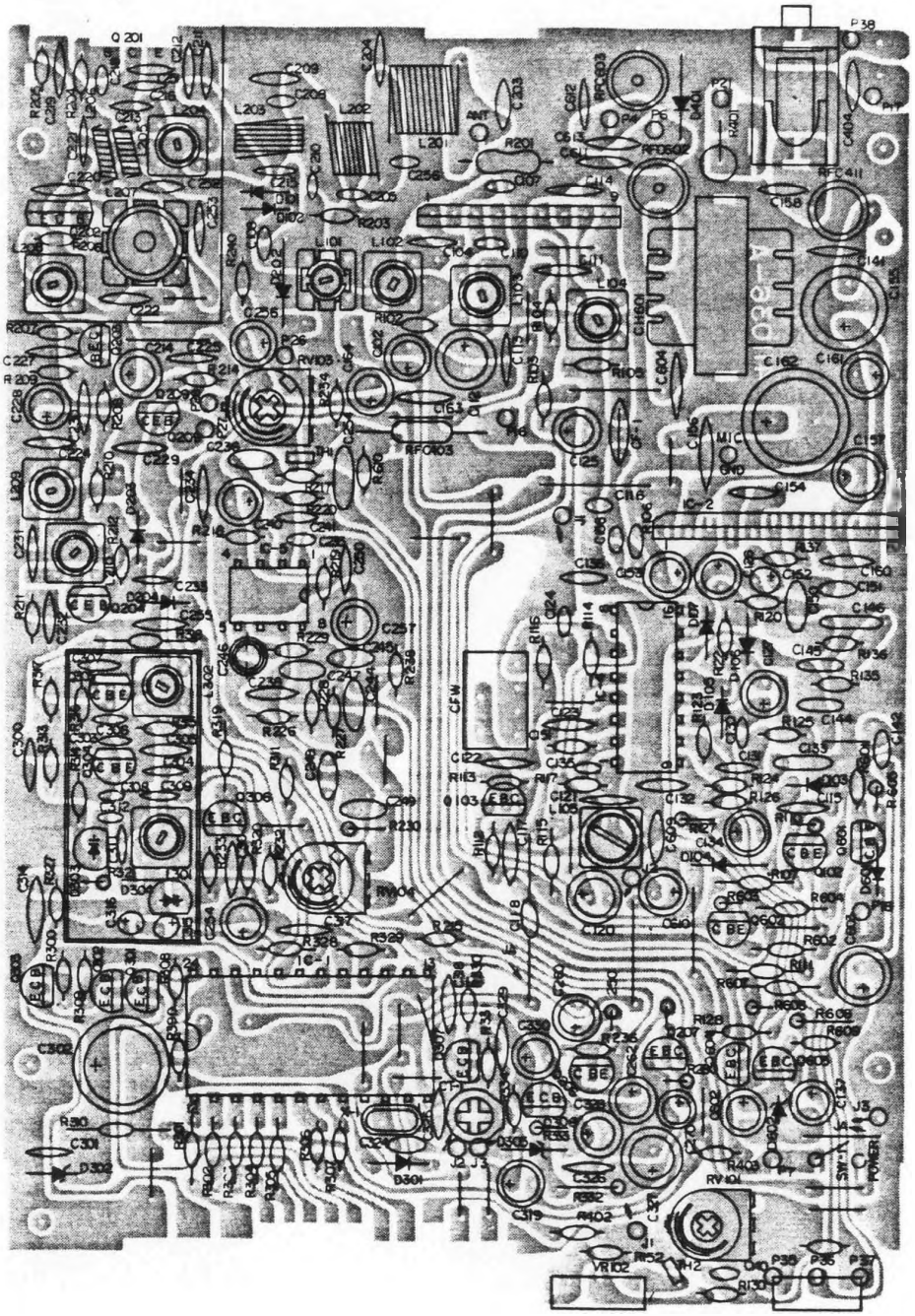
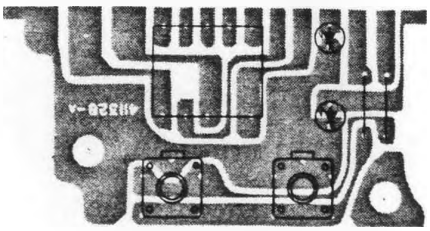
Component Side.