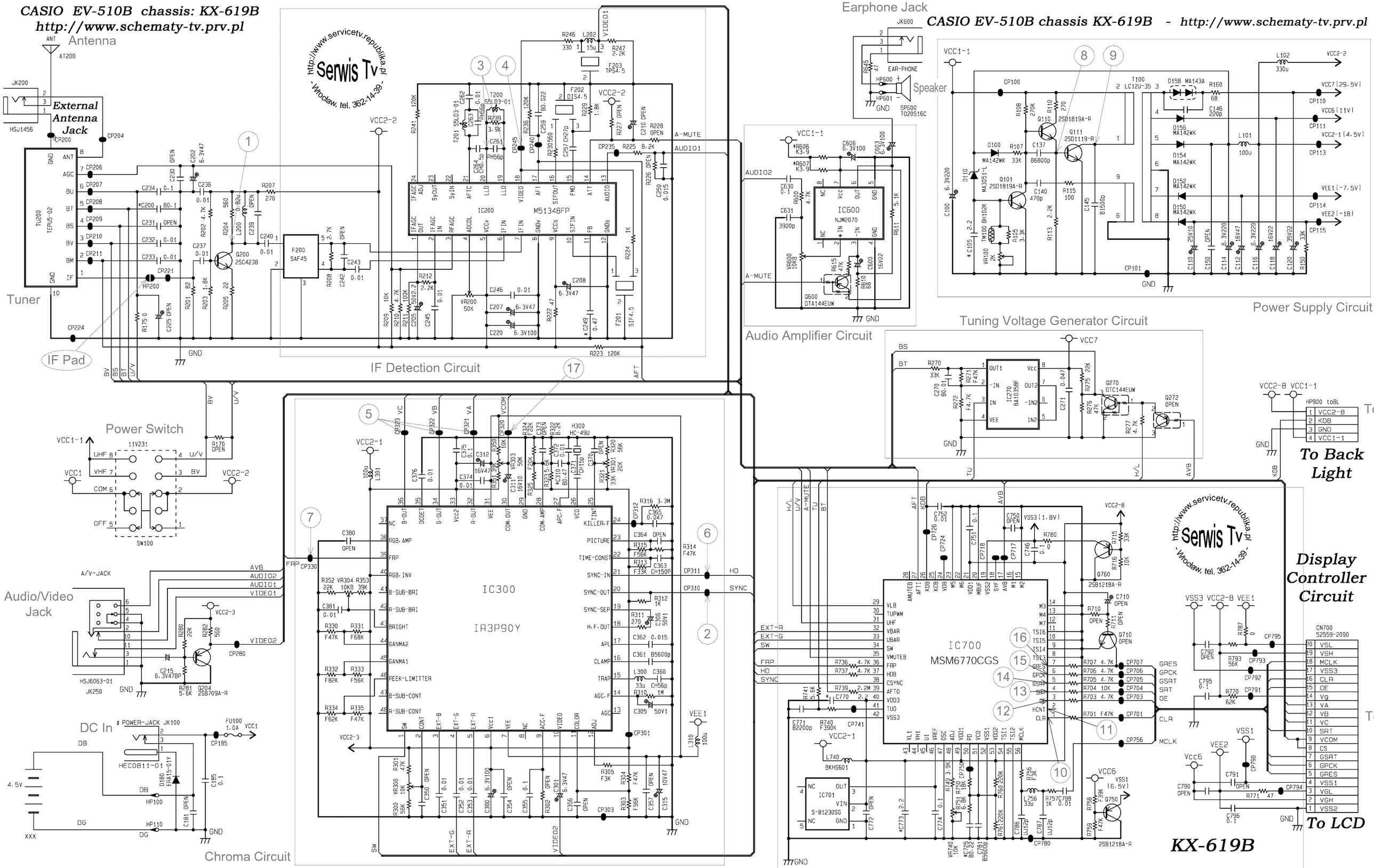
CASIO EV-510B chassis: KX-619B
http://www.schematy-tv.prv.pl
CASIO EV-510B chassis KX-619B - http://www.schematy-tv.prv.pl
Antenna
External Antenna Jack
Tuner
IF Pad
IF Detection Circuit
Earphone Jack
Speaker
Power Supply Circuit
Audio Amplifier Circuit
Tuning Voltage Generator Circuit
Power Switch
Audio/Video Jack
DC In
Chroma Circuit
Display Controller Circuit
To Back Light
To LCD
KX-619B
IC300
IR3P90Y
IC700
MSM6770CGS
IC200
M51348FP
IC600
NJM2070
IC270
BA10358F
IC701
S-81230SG
TU200
TEPU5-02
F200
SAF45
Q200
2SC4238
Q600
DTA144EW
Q270
DTC144EW
Q272
OPEN
Q110
2SD1819A-R
Q111
2SD1119-R
Q101
2SD1819A-R
Q760
2SB1218A-R
Q710
OPEN
Q750
2SB1218A-R
Q204
2SB709A-R
T100
LC12U-35
T200
SSLD3-01
T201
SSLD3-01
F202
DIS4.5
F203
TPS4.5
F201
SIF4.5
H300
HC-49U
SW100
11V231
A/V-JACK
HSJ6063-01
JK250
HECO811-01Y
D180
ERA15-01Y
JK100
JK200
HSJ1456
JK600
SP600
T020S16C
CN700
52559-2090
HP900 toBL
VCC2-8
KDB
GND
VCC1-1
VCC2-1
VCC2-2
VCC2-3
VCC7
VCC6
VEE1
VEE2
VSS1
VSS3
A-MUTE
AUDIO1
AUDIO2
AUDIO0
VIDEO1
VIDEO2
HD
SYNC
FRP
EXT-R
EXT-G
SW
BV
U/V
BS
BT
TU
H/L
AVB
AFT
VSL
VSH
MCLK
VSS3
CLR
OE
Vg
VA
VB
VC
SRT
VCOM
CS
GSRT
GPCK
GRES
VSS1
VGL
VGH
VSS2
GRES
GPCK
GSRT
SRT
OE
CLR
MCLK
Serwis Tv
http://www.servicetv.republika.pl
- Wrocław, tel. 362-14-59 -

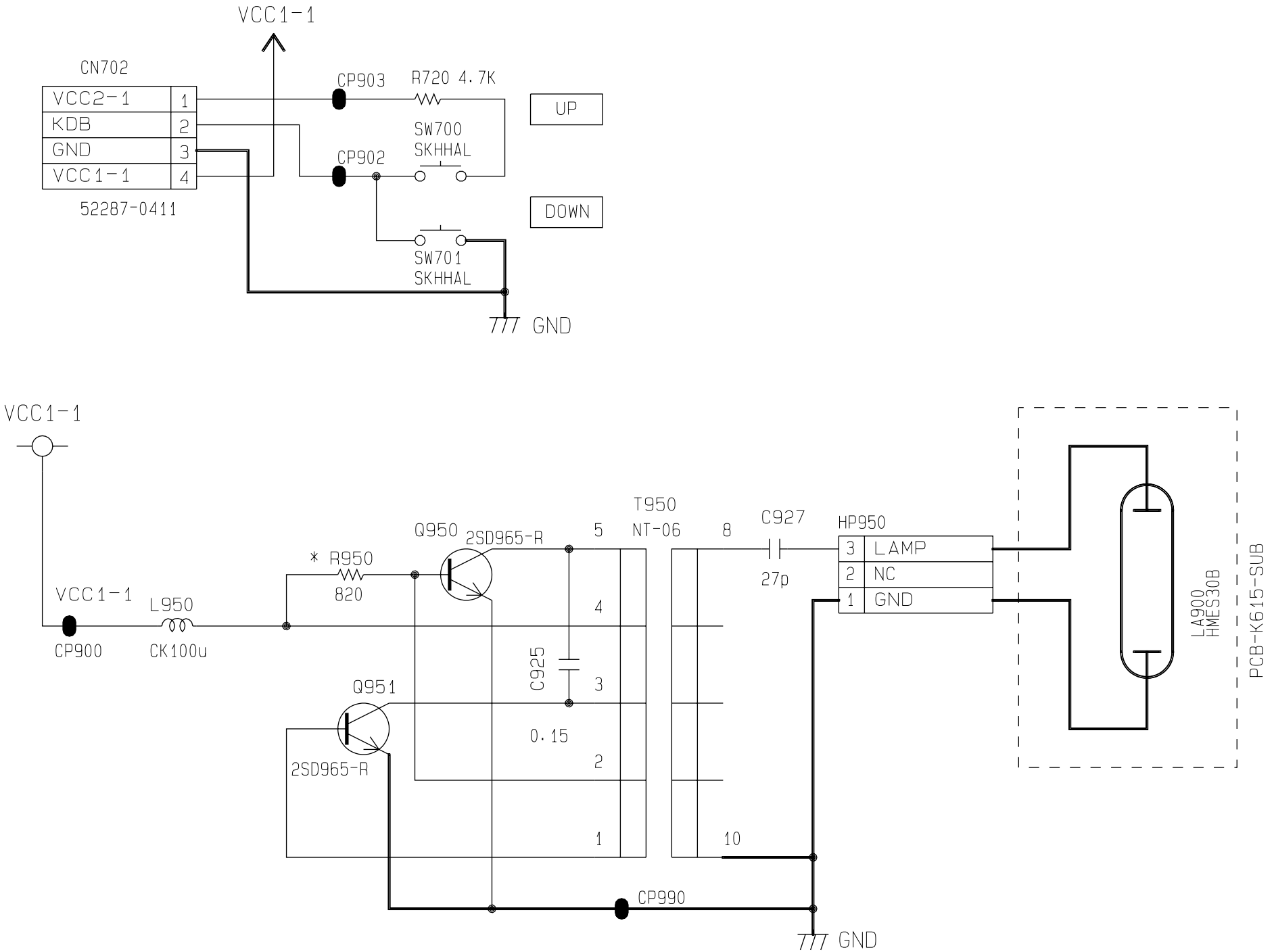
VCC1-1
CN702
VCC2-1 1
KDB 2
GND 3
VCC1-1 4
52287-0411
CP903
R720 4.7K
UP
SW700
SKHHAL
CP902
DOWN
SW701
SKHHAL
GND
VCC1-1
VCC1-1
CP900
L950
CK100u
* R950
820
Q950
2SD965-R
Q951
2SD965-R
C925
0.15
T950
NT-06
5
4
3
2
1
8
10
C927
27p
HP950
3 LAMP
2 NC
1 GND
LA900
HMES30B
PCB-K615-SUB
CP990
GND