MJ-2701
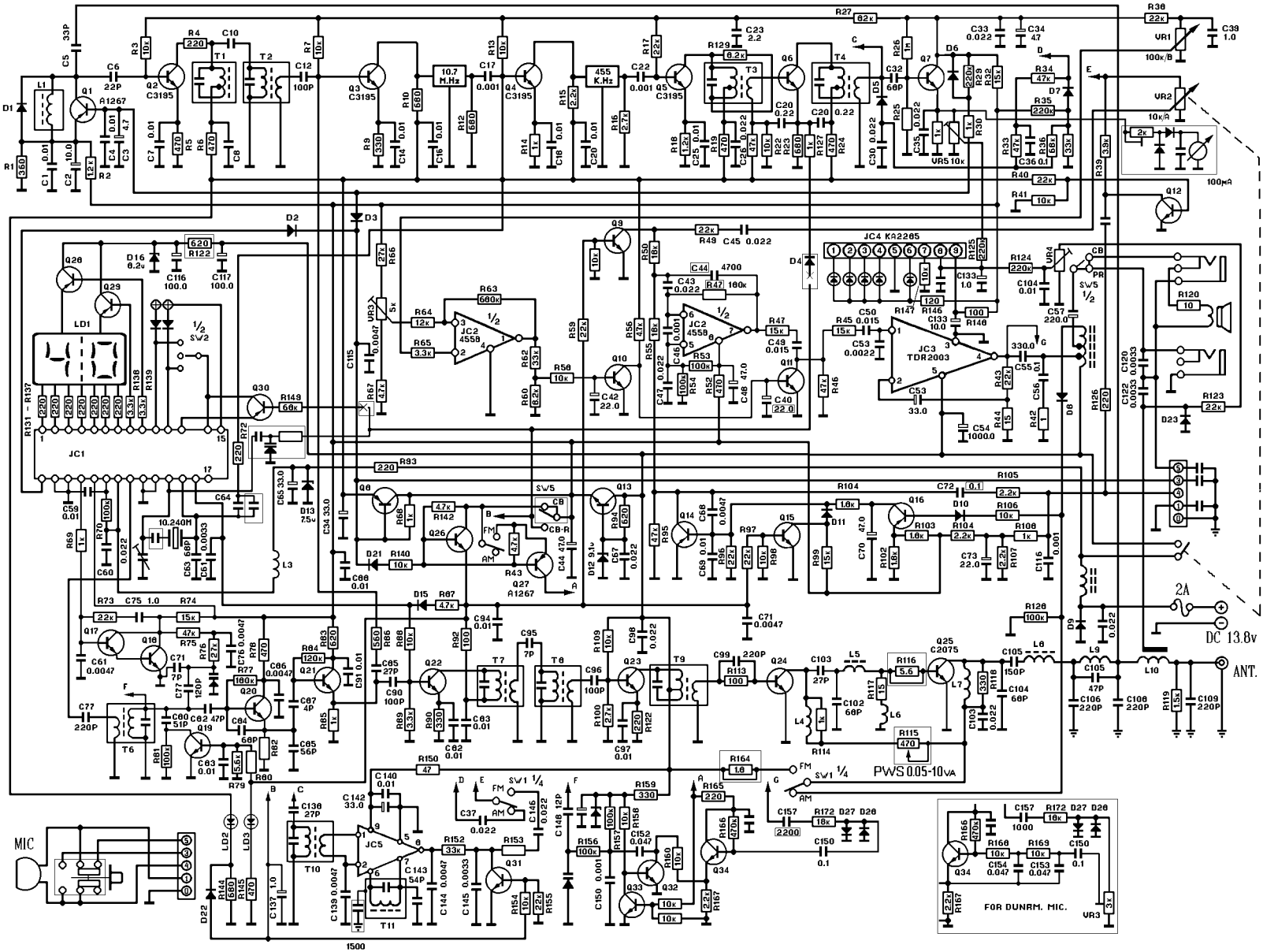
SUPER 2 × 40 CH. AM/FM CB TRANSCEIVER