SB ACOUSTICS

5” SB15NRXC30-4

Preliminary Data

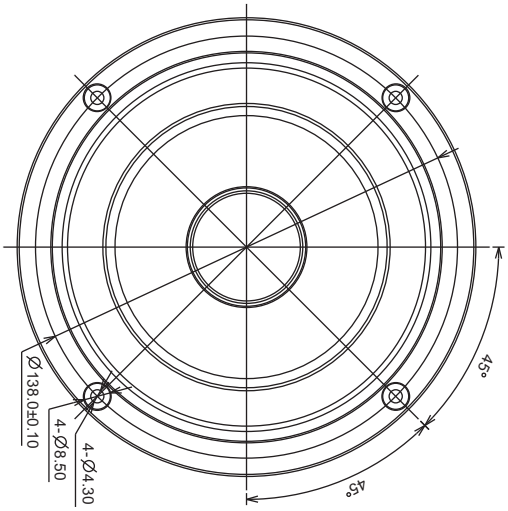

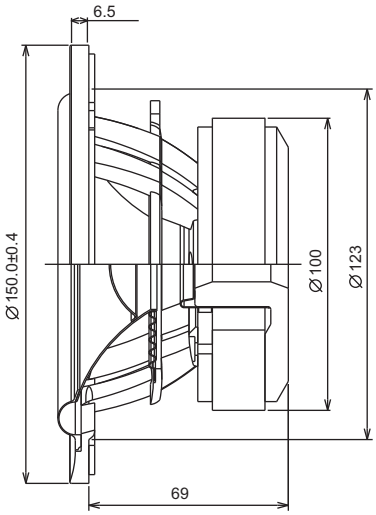

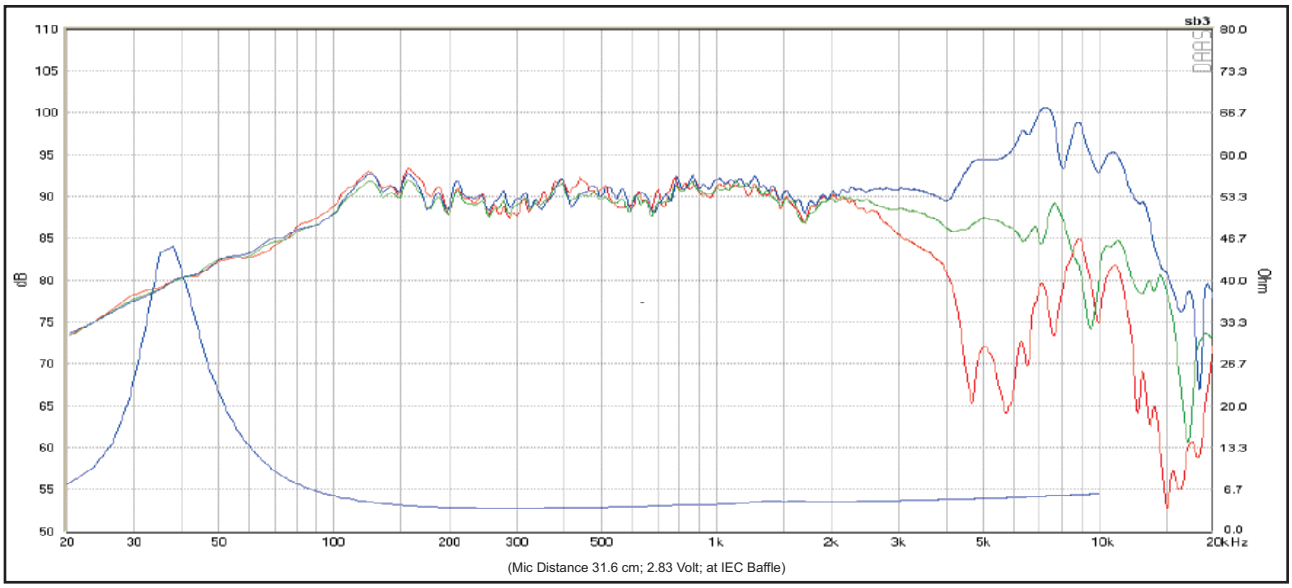

Response Curve :

(Blue) : on axis (Green) : 30 off-axis (Red) : 60 off-axis

Specs :

Nominal Impedance	4 Ω	Free air resonance, Fs	41 Hz
DC resistance, Re	3.1 Ω	Sensitivity (2.83 V/1m)	91 dB
Voice coil inductance, Le	0.12 mH	Mechanical Q-factor, Qms	5.3
Effective piston area, Sd	82 cm^2	Electrical Q-factor, Qes	0.31
Voice coil diameter	30.5 mm	Total Q-factor, Qts	0.29
Voice coil height	15 mm	Moving mass incl.air, md	8.6 g
Air gap height	5 mm	Force factor, Bl	4.7 Tm
Linear coil travel (p-p)	10 mm	Equivalent volume, Vas	16.7 liters
Magnetic flux density	1.0 T	Compliance, Cms	1.75 mm/N
Magnet weight	0.54 kg	Mechanical loss, Rm	0.42 kg/s
Net weight	1.48 kg	Rated power handling	50 watt

The parameter are measured on drive units that are broken in